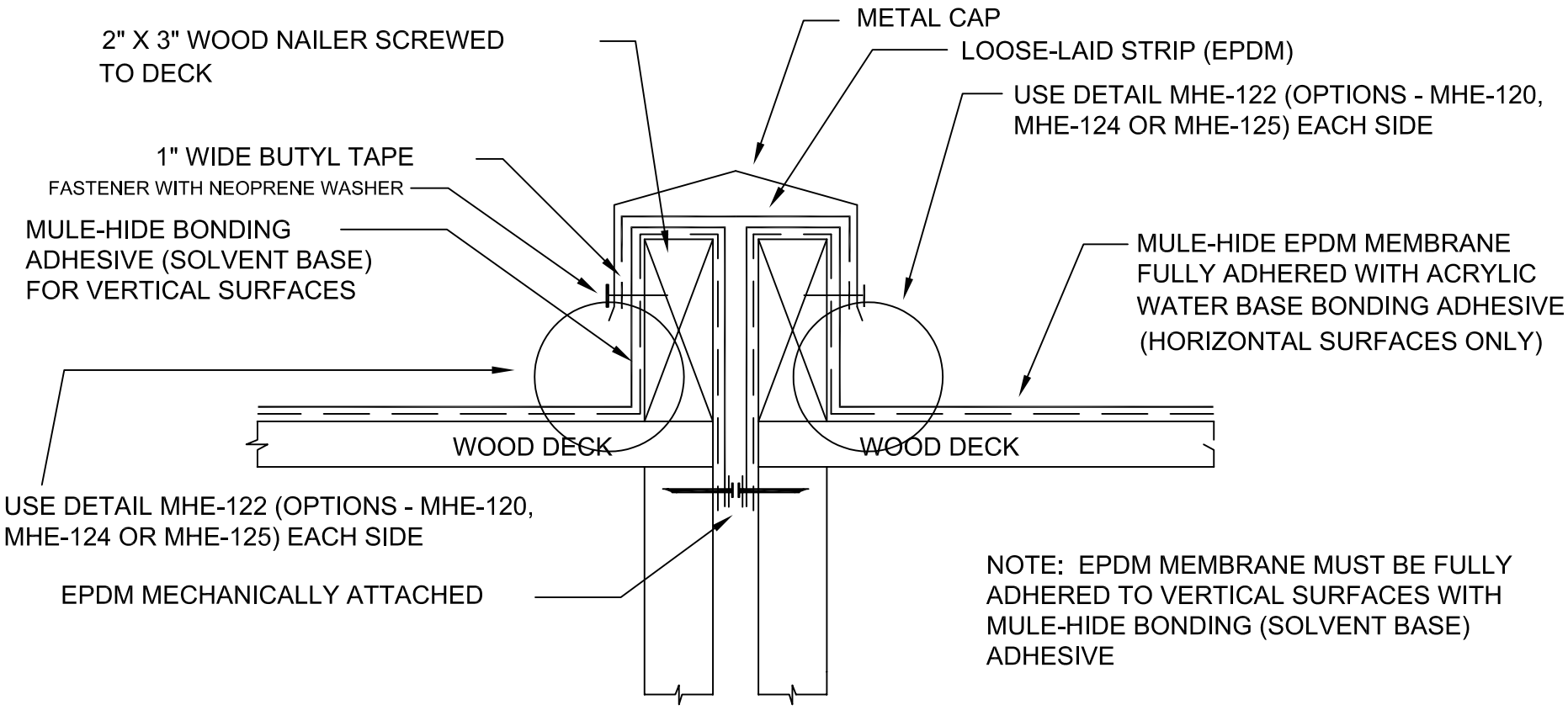

MULE-HIDE PRODUCTS CO., INC. 2002	RAISED MATE-LINE MODULAR SYSTEMS	DETAIL NO.: MHE-307