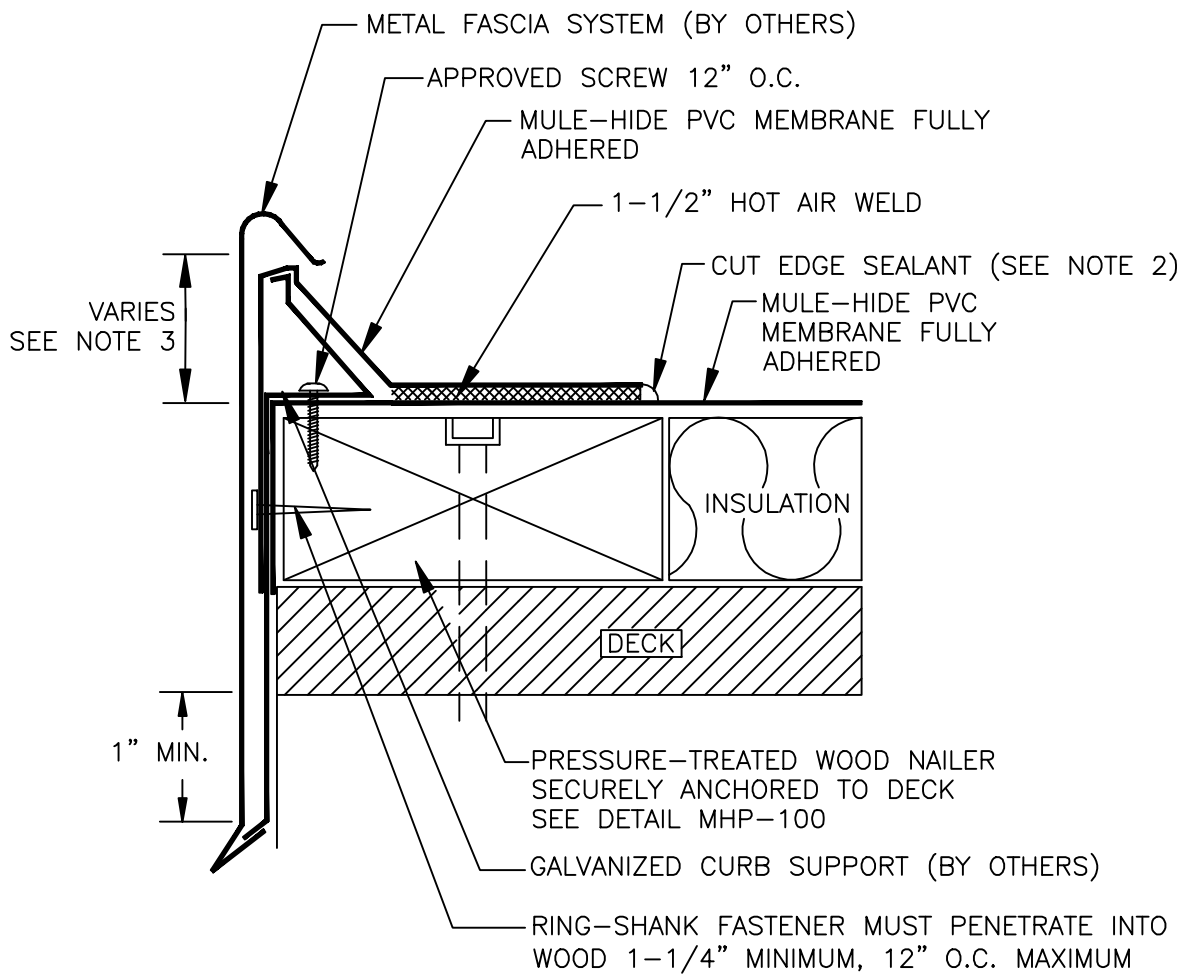


NOTES:

1. DETAILS TO BE USED IN CONJUNCTION WITH STANDARD GUIDE SPECIFICATIONS CONTAINING REQUIREMENTS FOR NAILERS, INSULATION, SLIPSHEETS, ETC.

2. PVC EDGE SEALANT IS REQUIRED ON ALL CUT OR NON-ENCAPSULATED EDGES OF REINFORCED MEMBRANE. THIS INCLUDES FACTORY CUT MEMBRANE.

3. APPLICATOR/SPECIFIER TO DETERMINE HEIGHT REQUIRED TO PREVCENT WATER FROM CASCADING OVER BUILDING EDGE.

| | | |
|---|---|---|
| **MULE-HIDE PRODUCTS CO., INC.** **04/01/2007** | **SNAP-ON FASCIA (BY OTHERS) SYSTEMS:** **FULLY ADHERED PVC** | **DETAIL NO:** **MHP-103** |